Sm basic subtractor multiplexor
inputs x, y, b, u outputs bo d
d <= x-y-b when u=1 else x

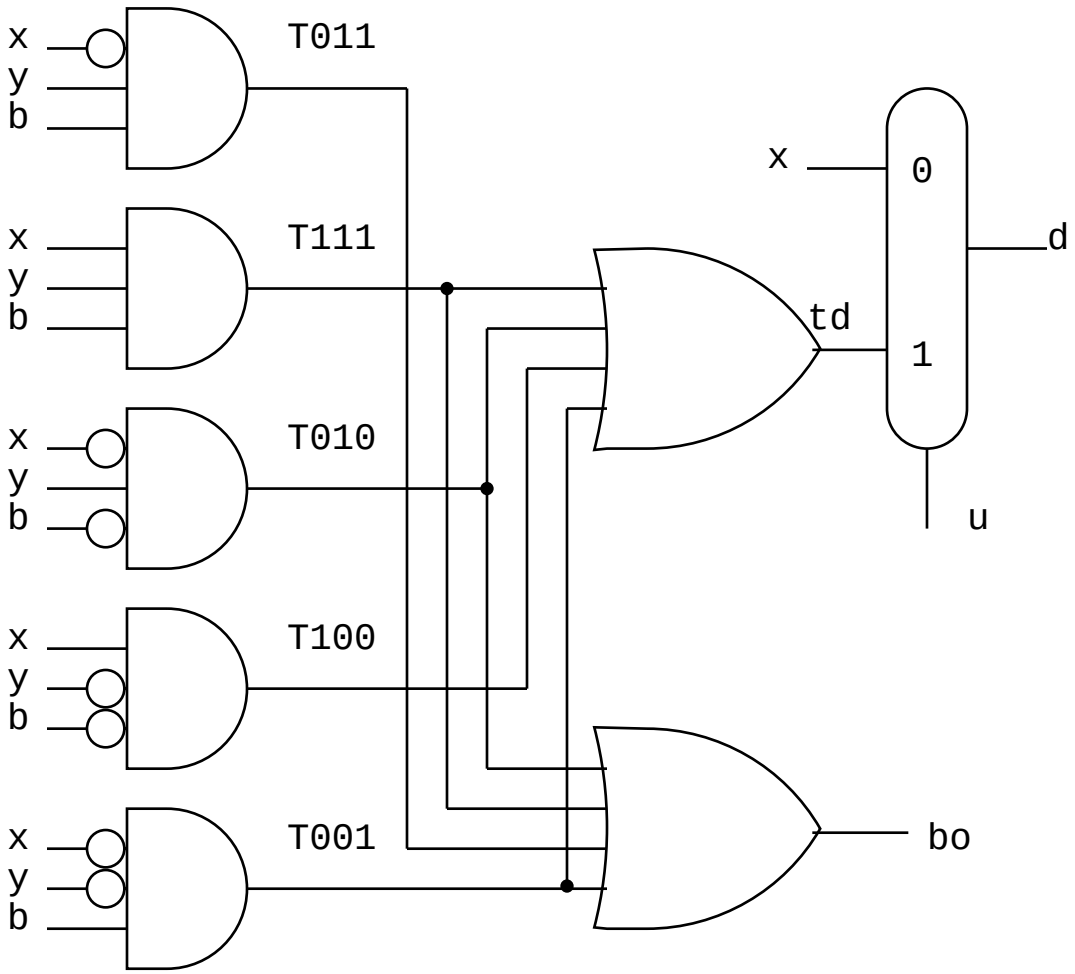

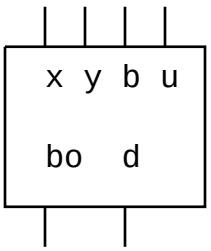

Sm circuit symbol
Sn, Sb, S1, S0, S0b, S1b
are minimized subset of Sm