Sb minimized Sm subtractor multiplexor
inputs x, y, b (u=0) outputs b0

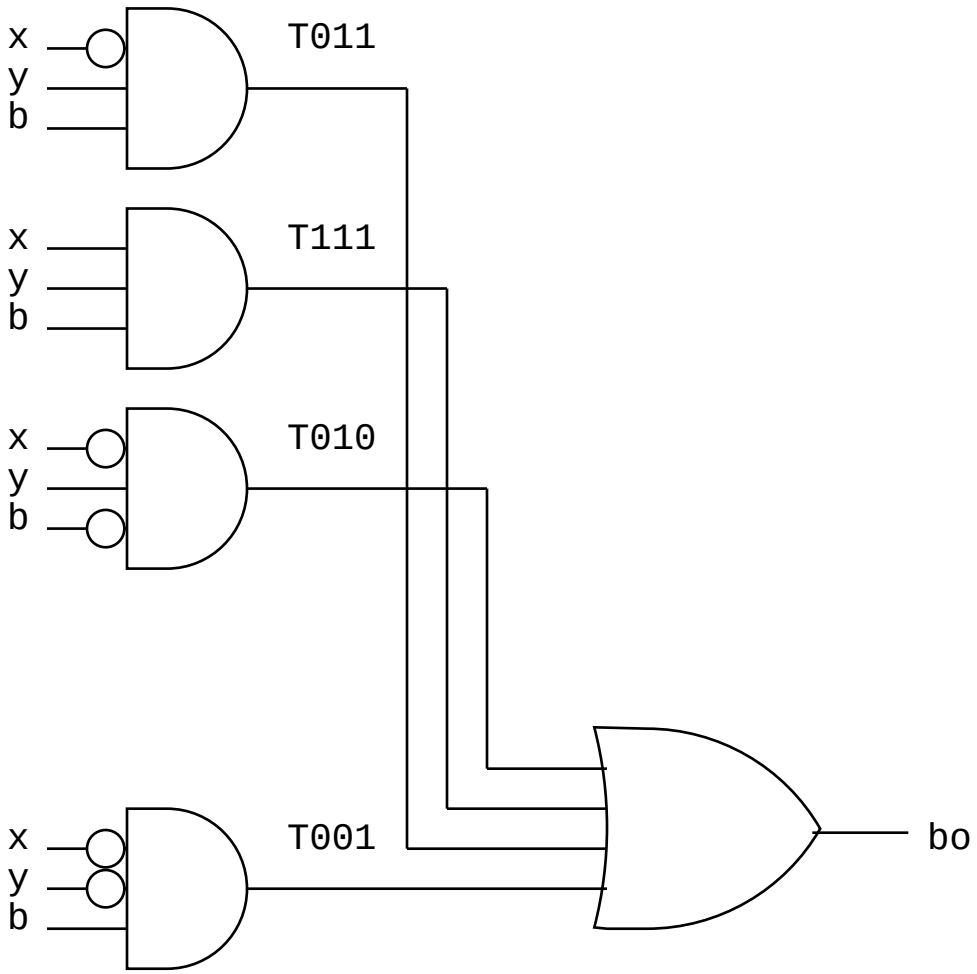

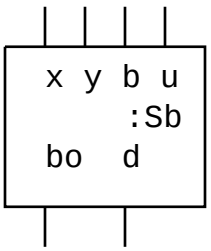

Sb circuit symbol
Sn, Sb, S1, S0, S0b, S1b
are minimized subset of Sm