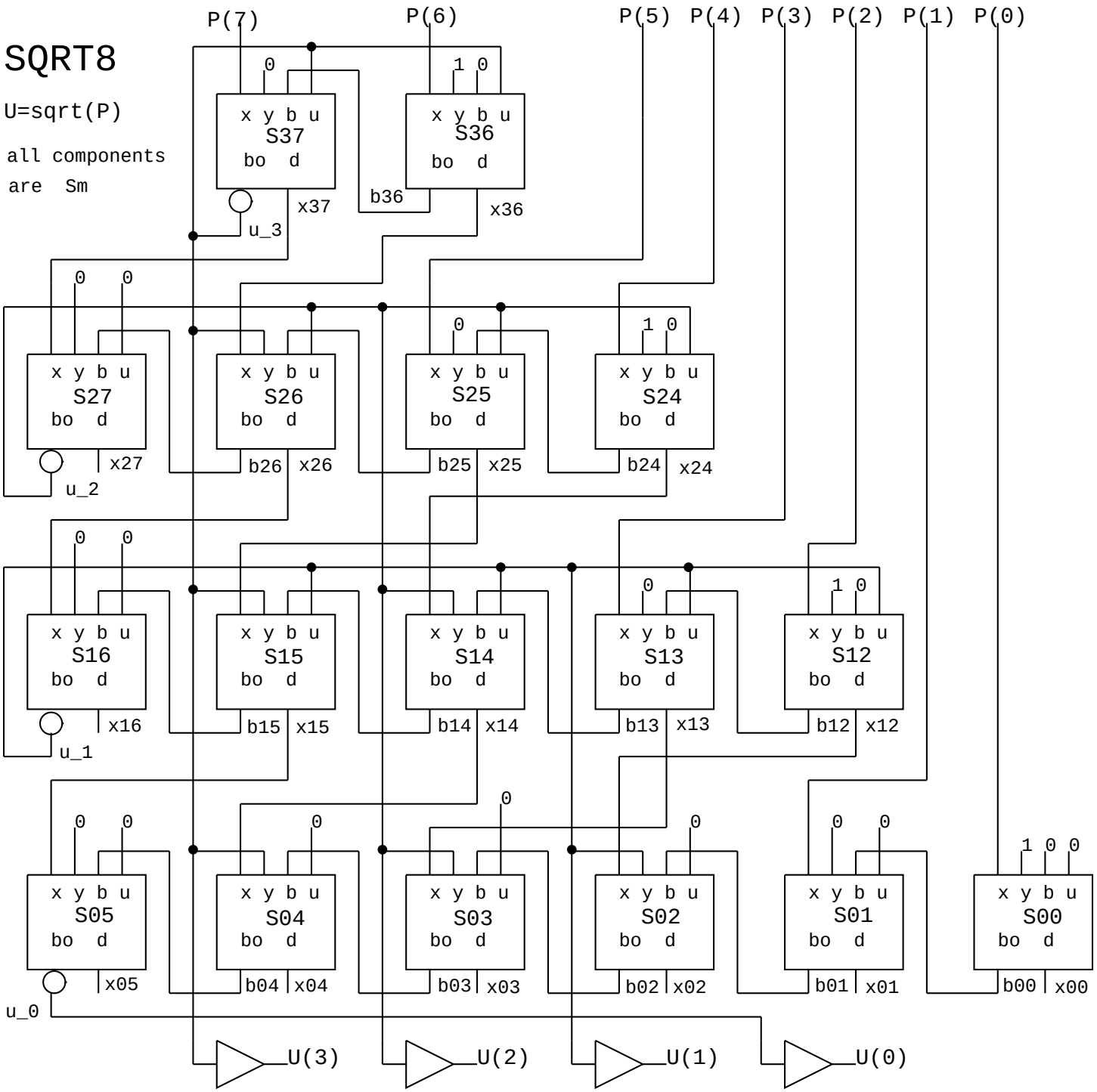
SQRT8
U=sqrt(P)
all components
are Sm
P(7)
P(6)
P(5)
P(4)
P(3)
P(2)
P(1)
P(0)
S37
S36
S27
S26
S25
S24
S16
S15
S14
S13
S12
S05
S04
S03
S02
S01
S00
x y b u
bo d
b36
x36
x37
u_3
b26
x26
x27
u_2
b25
x25
b24
x24
b15
x15
x16
u_1
b14
x14
b13
x13
b12
x12
b04
x04
x05
u_0
b03
x03
b02
x02
b01
x01
b00
x00
U(3)
U(2)
U(1)
U(0)